12-602.309X4 - SEATING LAYOUT

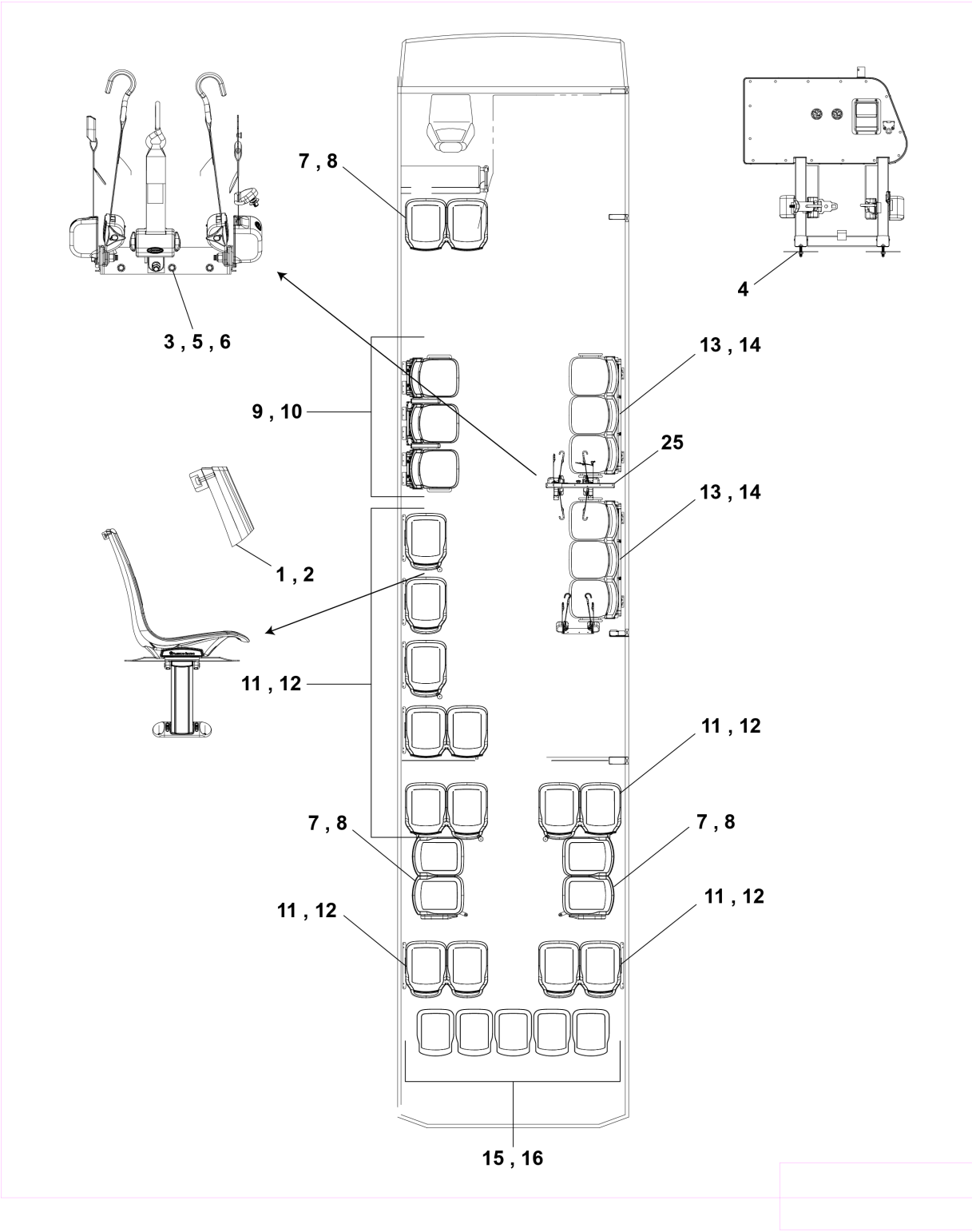

12-602.309X4 - SEATING LAYOUT

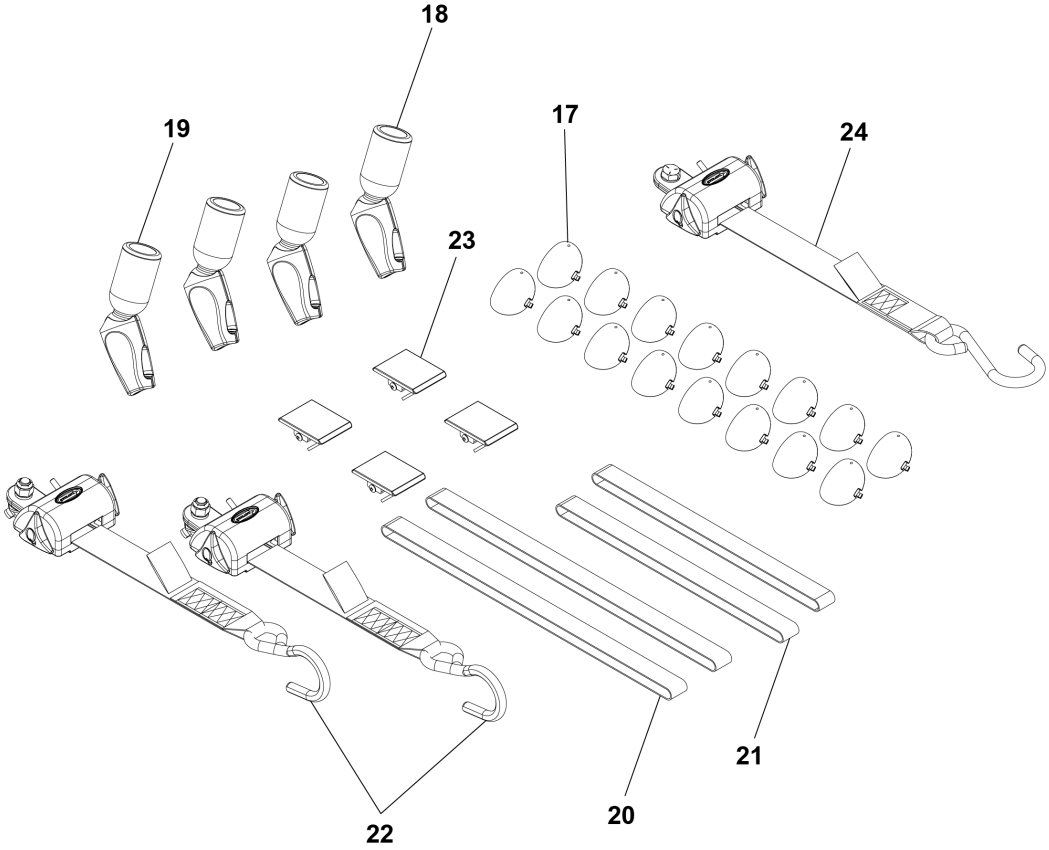

12-602.309X4 - SEATING LAYOUT

Sup.	Has Recom.?	Is Assy.?	Item #	MFG Code	Part #	Description	Qty.	French	Remarks	Internal No	Vendor No.	Vendor Name	Note / Text
			0	NOVA	DSPEC	PLEASE CALL ORDER DESK REGARDING PARTS NOT SHOWN		SVP CONTACTER LA PRISE DE COMMANDES POUR LES PIECES NON MONTRÉES					
			1	NOVA	449831	SCREW 10-24 X 1.00	1	VIS 10-24 X 1.00			STPPF010C 0100Z	STANLEY	
			2	NOVA	6940917	RUBBER BUMPER	1	BUTOIR CAOUTCHOUC			REC2098	ROBCO INC.	
			3	NOVA	9429477	SCREW 3/8-16 X 2.00	3	VIS 3/8-16 X 2.00			9429477	METRICAN FASTENERS LTD.	
			4	NOVA	N25253	TAPPING PLATE 148mm X 160mm	4	PLAQUE DE VISSAGE 148mm X 160mm			PRIMER 206 G+P	USINAGE LAURENTIDES INC.	
			5	NOVA	N31509	LOCK WASHER 3/8"	3	RONDELLE D'ARRÊT 3/8"			51450 096 001	METRICAN FASTENERS LTD.	
			6	NOVA	N31510	WASHER FLAT 3/8	3	RONDELLE 3/8			51420 096 001	METRICAN FASTENERS LTD.	
			7	NOVA	N8912918	BACK INSERT	6	COUSSIN DE DOSSIER			1584652SN UQJ	AMERICAN SEATING	
X			8	NOVA	N8913525	CUSHION INSERT	6	COUSSIN DE FESSIER			1584672SN UQJ	AMERICAN SEATING	
			9	NOVA	N8912919	BACK INSERT	3	COUSSIN DE DOSSIER			1584650SN UXL	AMERICAN SEATING	
			10	NOVA	N8912920	CUSHION INSERT	3	COUSSIN DE FESSIER			1584670SN UXL	AMERICAN SEATING	
			11	NOVA	N8912921	BACK INSERT	13	COUSSIN DE DOSSIER			1584640SN UQJ	AMERICAN SEATING	
			12	NOVA	N8912922	CUSHION INSERT	13	COUSSIN DE FESSIER			1584660SN UQJ	AMERICAN SEATING	
			13	NOVA	N8912923	BACK INSERT	6	COUSSIN DE DOSSIER			1584652SN UXL	AMERICAN SEATING	
			14	NOVA	N8912924	CUSHION INSERT	6	COUSSIN DE FESSIER			1584670SN UXL	AMERICAN SEATING	
			15	NOVA	N8912925	BACK INSERT	5	COUSSIN DE DOSSIER			1584653PN UQJ	AMERICAN SEATING	
			16	NOVA	N8913534	CUSHION INSERT	5	COUSSIN DE FESSIER			1584673PN UQJ	AMERICAN SEATING	
			17	NOVA	N8898760	SPHERICAL PLASTIC CAP GRIS / GREY	16	CAPUCHON SPHERIQUE EN PLASTIQUE GRIS / GREY			150907000	AMERICAN SEATING	
			18	NOVA	N8913514	STANCHION CUP ASM VISION	1	ANCRAGE DE POTEAU ASS. VISION			152841000	AMERICAN SEATING	
			19	NOVA	N8897174	STANCHION CUP ASM INSIGHT	3	ANCRAGE DE POTEAU ASS. INSIGHT			152841100	AMERICAN SEATING	
X			_REF	NOVA	N8900141	_BUSHING STANCHION CUP 2 1/8" R0.06"	0	. COUSSINET D'ANCRAGE DE POTEAU 2 1/8" R0.06"			152837000	AMERICAN SEATING	
			_REF	NOVA	N8902928	_BUSHING STANCHION CUP 2 1/8" R0.10" rev.A 3/27/2015	1	. COUSSINET D'ANCRAGE DE POTEAU 2 1/8" R0.10" rev.A 3/27/2015			152837000	AMERICAN SEATING CO.	
			20	NOVA	N8902441	LOOP, SCOOTER SECUREMENT 18.5"	2	SANGLE POUR SCOOTER 18.5"			151991000	AMERICAN SEATING	
			21	NOVA	N8898993	LOOP, SCOOTER SECUREMENT 14.5"	2	SANGLE POUR SCOOTER 14.5"			150102000	AMERICAN SEATING	
			22	NOVA	N8896670	FLOOR BELT WITH HOOK / AVEC CROCHET	2	COURROIE AU PLANCHER WITH HOOK / AVEC CROCHET			150716000	AMERICAN SEATING	
			23	NOVA	N8881677	PEDESTAL CAP	4	BOUCHON PIEDESTAL			093148004	AMERICAN SEATING	
			24	NOVA	N8913557	SEAT BELT	1	CEINTURE DE SECURITE			150711002	AMERICAN SEATING	
			_REF	NOVA	N8960482	_WASHER NYLON, 0.515" ID, 0875" OD, 0.060" THK.	2	. RONDELLE NYLON, 0.515" ID, 0875" OD, 0.060" THK.			H10549	Q'STRAINT	
			_REF	NOVA	N8960483	_SCREW HEX HEAD 1/2"-13 X 7/8" GRADE 5	1	. VIS HEX HEAD 1/2"-13 X 7/8" GRADE 5			H10590	Q'STRAINT	
		X	25	NOVA	N8915212	BARRIER 6468 W/Q'STRAINT BELTS	1	BARRIÈRE 6468 AVEC CEINTURES Q'STRAINT			1NMDT1R1 #######	AMERICAN SEATING COMPANY	
			501	NOVA	N78807	SEAT SET ASM 33 PASSENGER		SEAT SET ASM 33 PASSENGER	R		N78807	AMERICAN SEATING COMPANY	
			502	NOVA	N43960	VINYL TRIM LOWER / BAS	QR	GARNITURE DE VINYLE LOWER / BAS			N43960	NOVA BUS - LFS	
			503	NOVA	N60981	FOAM TAPE NEOPRENE 11/16" W X 1/4" T	QR	RUBAN MOUSSE NEOPRENE 11/16" W X 1/4" T			30418GSA 900 900	LES INDUSTRIES PRO-TAC INC.	
			504	NOVA	N73004	SEALANT SIKALASTOMER-714	QR	SCELLANT SIKALASTOMER-714			F13079	SIKA CANADA INC.	
			505	NOVA	N97665	LOCTITE 243	QR	LOCTITE 243			AA555	TENAQUIP LTD	
			506	NOVA	N99200	VINYL EXTRUSION, WALL RAIL	QR	EXTRUSION DE CAOUTCHOUC, RAIL DU MUR			N99200	ILPEA INDUSTRIES	

R FOR REFERENCE ONLY